IMF PART NO.	1901A0177A1FC
PALMER PART NO.	700000900A
DESCRIPTION	BLADE ASSEMBLY 40/60

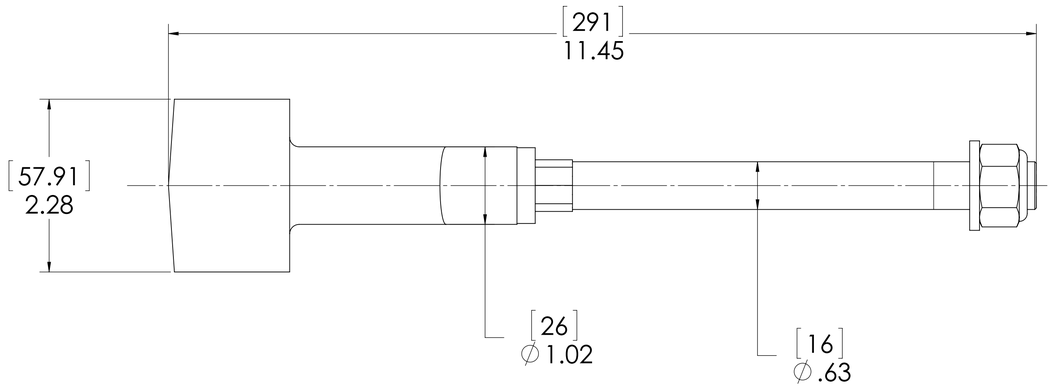

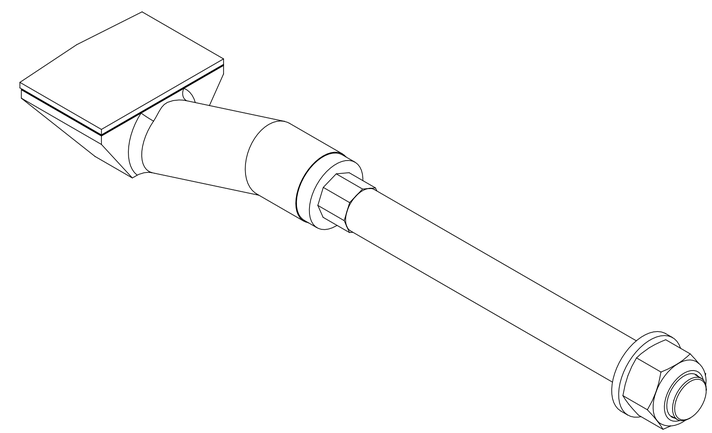

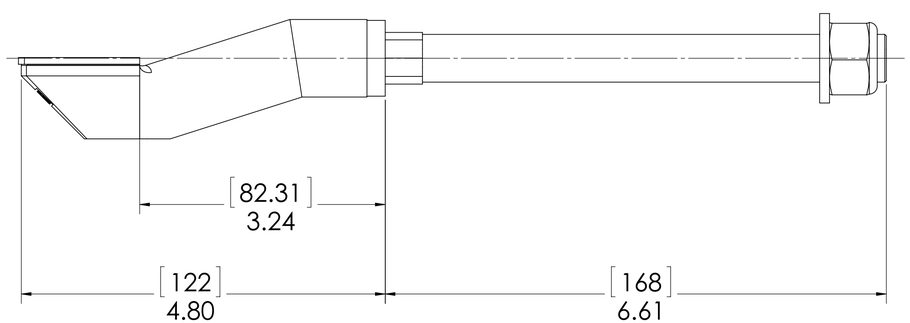

NOTE: UNITS IN [MM] INCHES

PROPRIETARY AND CONFIDENTIAL - THE INFORMATION CONTAINED IN THIS DRAWING IS THE SOLE PROPERTY OF PALMER MANUFACTURING. ANY REPRODUCTION IN PART OR AS A WHOLE WITHOUT THE WRITTEN PERMISSION OF PALMER MANUFACTURING IS STRICTLY PROHIBITED.

REV	ECN	DATE

UNLESS OTHERWISE SPECIFIED:
DIMENSIONS ARE IN INCHES
TOLERANCES:
FRACTIONAL ±1/16
ANGULAR: MACH ±1 BEND ±1
ONE PLACE DECIMAL ±.150
TWO PLACE DECIMAL ±.030
THREE PLACE DECIMAL ±.005

MATERIAL

FINISH

WEIGHT

	NAME	DATE
DRAWN	RJ	7/27/16
APPROVED		

NOTE

CUSTOMER

PART NO.
021032

PALMER MANUFACTURING & SUPPLY, INC.
18 BECHTLE AVE
SPRINGFIELD, OH
45504 U.S.A.
(937) 323-6339
(800) 457-5456

TITLE
BLADE ASSEMBLY 40/60

SIZE	DWG. NO.	REV
D	700000900A	0

SCALE: 1:1 | DO NOT SCALE | SHT 1 OF 1